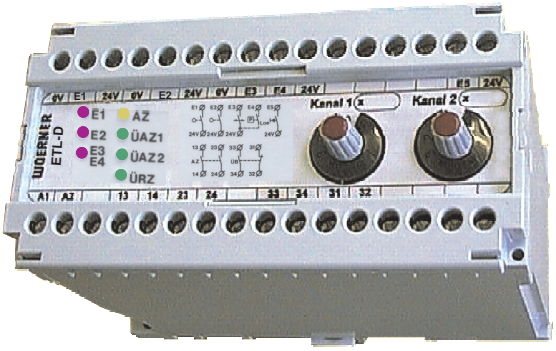

Control- and monitoring unit ETL-D

- **Load-dependent switch-on Twin-channel counting**
- **Switch-off by lubricant monitoring. One delayed and one instantaneous input**
- **Monitoring of operating time (twin-channel)**
- **Monitoring of distributor cycles during idle time**
- **Internal monitoring functions**

Connection diagram

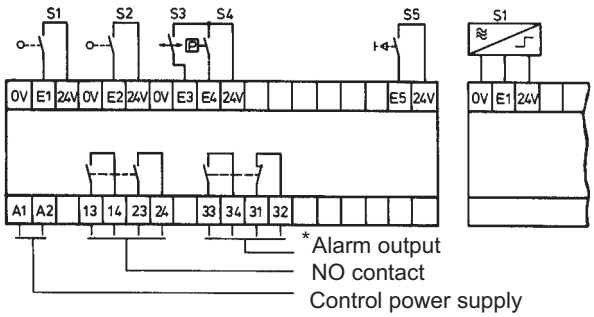

S1 Counting, Channel 1

S2 Counting, Channel 2

S3 Lubricant monitoring, instantaneous input for sequence distributors

S4 Lubricant monitoring delayed input for single-line systems

S5 Intermediate lubrication cancel fault

* setting ≙ faut

Dimension

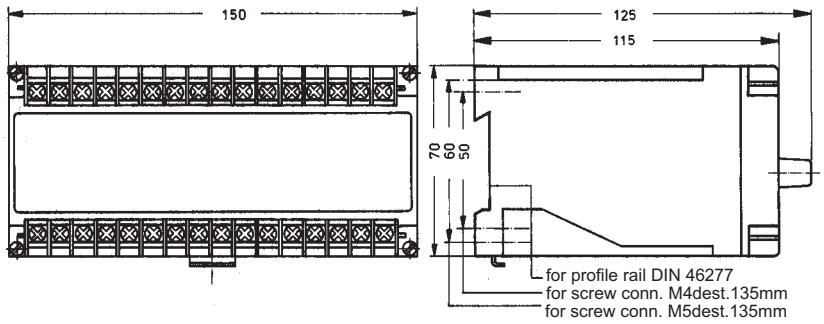

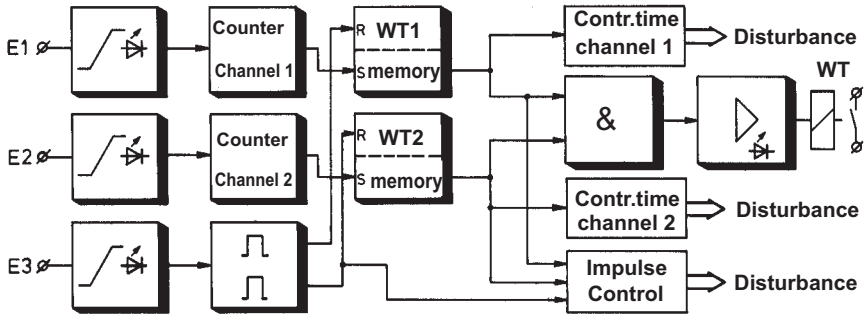

Application:
The ETL-D control and monitoring unit has been designed for systems with a high reliability requirement.

Typical applications are for central lubrication systems which are switched on according to load and switched off again by a checkback signal from a lubricant monitoring device. The principal applications are for progressive and single-line systems

Technical data:

Power consumption max.:	ca.5 VA
Power supply:	
standard	230,115 V
special	24, 42 V
	50÷60 Hz
	-10÷+15 %
Contact rating	
Inputs E1/E2/E3/E4/E5:	24 VDC
	8 mA
Counting speed	
at E1/E2:	2500 pulses/min.max.
	with pule duty factor 1:1
	Impulse width/pulse interval
	min. 8 msec
Contact data:	
Relay outputs AZ and ÜB max.:	250 VAC
	5 A
,	1250 VA
	2 A at 24 VDC
	0,4 A at 230 VDC
Ambient temperature:	-10÷+60°C
Protection type:	Housing IP 50
	Terminals IP 10
Weight:	0,55 kg

- Änderungen vorbehalten -

EUGEN WOERNER GmbH & Co.KG
Postfach 1661 D-97866 Wertheim
Am Eichamt 8 D-97877 Wertheim
☏ (09342) 803-0 Fax (09342) 803-202
E-Mail: info@woerner.de

Leaflet-No. **0141.10.02 GB**
Supplements No.
Replaces No. 0141.02.88 GB

EUGEN WOERNER GmbH & Co.KG
Postfach 1661 D-97866 Wertheim
Am Eichamt 8 D-97877 Wertheim
☏ (09342) 803-0 Fax (09342) 803-202
E-Mail: info@woerner.de

1.Switch-on conditions

1.1 Control supply ON prelubricaton
When the control supply is energized the three fault stores in the unit are interrogated for the not-set status. If this is present the fault stores are set and prelubrication is initiated. (If the control power supply is temporarily interrupted it must remain interrupted for more than 1 sec.

1.2 Intermediate lubrication
Intermediate lubrication can be initiated by closing a contact at E5/24V.

1.3 Counting ON
The unit contains two independent counters with the inputs E1 and E2. Each counter have his own decade switch. Both decade switches (channels 1 nd 2) must always be set to the same value. The main store for the approbriate channel is set when the number of pulses counted in tallies with the set number of pulses. When **both** main stores are set the operating relay is triggered. The counters remain reset during the operating time. There are four counting ranges:

1-9; 10-90; 100-900; und 1000-9000.
The ranges must be stated when ordering.

2. Switch - off conditions:
The signal from a lubricant monitoring device ends the operating time. The inputs E3/E4 are dynamic, i.e. the unit only detects the positive change in signal

2.2 Input E3 instantaneous
Input E3 must be used for progressive systems.

2.2 Input E4 delayed
Input E4 must be used for single-line systems. The switch-off signal is delayed by 0,5 to 1 sec.

3. Monitoring

3.1 Operating time, channel 1
The setting of the main store for channel 1 causes the monitoring time for channel 1 to start running in the unit. The main store must be reset within the preset monitoring time so that no fault alarm is given. The fault store is reset if there is a fault alarm. The alarm relay drops out. The monitoring time can be 60 or 300 sec. (see order designation)

3.2 Operating time, channel 2 2
The monitoring for channel 2 runs separately from channel 1 but has the same function.

3.3 Distributor cycles during idle time
During idle time the pulses at E3 are counted and a fault alarm is given if 8 are received.

3.4 Counter monitoring
The separation of the two channels 1 and 2 combined with the monitoring time for each channel allows the counters to be monitored.

Example:
Channel 1 is working without any faults. the main store of channel 1 is set. The monitoring time is started. If the second main store is not set due to a fault in channel 2, the operating relay is not energized and so there is no reset pulse from the lubrication system. Channel 1 signals a fault.

Since the operating time monitoring also incorporates monitoring of the counters, it is possible that the two counters do not have to work exactly in synchronism and a small difference is allowed.

3.5 Fault stores
There are three fault stores which, wen the unit is switched on, are set provided they have been interrogated beforehand for the non-set status . The alarm relay is energized. If there is a fault, the appropriate fault store is reset and the alarm relay drops out.

3.6 Fault alarm cancel
The fault alarm can be cancelled via input E5/24V and a new lubrication cycle is initiated at the same time.

4. Outputs

4.1 Operating relay contacts AZ
There are two floating NO contacts for triggering the solenoid valve or pump.
Terminals. 13/14; Kl. 23/24.

4.2 Alarm outputs ÜB
There are floating NO and NC contacts for the alarm outputs. The relay is picked up during normal, faultless operation. The NO contact is closed and the NC contact is open.
Contact terminals 33/34 und 31/32.

5. Monitoring devices
Both floating contacts and proximity sensors can be used as monitoring devices. The proximity sensors should be suitable for 24VDC and possess a PNP output.

6. Indicators
LED's are incorporated in the unit and have the following functions:

E1/E2/E3/E4 are red,
and light up on pulse input.

AZ - yellow
lights up when operating relay is triggered

ÜAZ1 green
lights up when operating time 1 is OK

ÜAZ2 green
lights up when operating time 2 is OK

ÜRZ green
lights up when less than 8 pulses are received during the idle time.

Order designation:

Control unit ETL-D / ○ / ○ / ○

Counting range		Monitoring time		Voltage / Frequency	
1÷ 9	0009	60 sec	060	230V 50÷60Hz	230VAC
10÷ 90	0090	300 sec	300	115V 50÷60Hz	115VAC
100÷ 900	0900			42V 50÷60Hz	42VAC
1000÷9000	9000			24V Gleichspannung	24VDC