WOERNER
ZENTRALSCHMIERANLAGEN

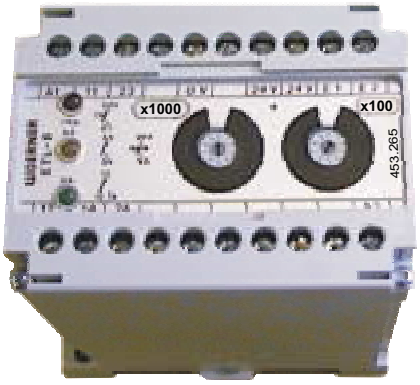

Control- and monitoring unit
ETL-B **453.265**

- **Switching-on load-controlled pulse counting**
- **Switching-off by a return signal via a control element**
- **Monitoring of the operating time**
- **Maximum preselectable number of pulses 9900**
- **Precise setting via two decade switches**
- **Indication of signal on the unit via light-emitting diodes (LED)**
- **Housing can be snapped onto profile rails**

Connection diagram

E1 = contact

E1 = proximity switch

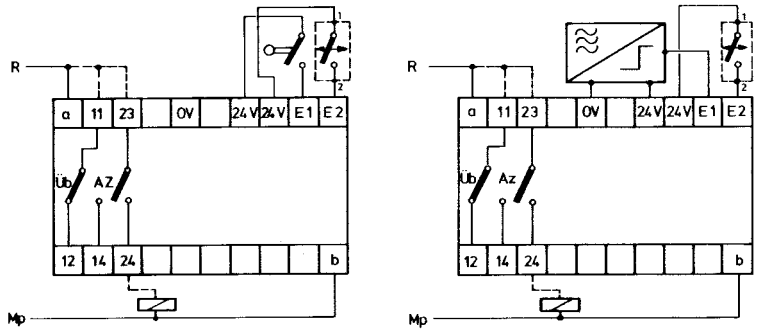

E1 = Input counting
E2 = Input lubricant control
Üb = monitoring
AZ = operating time

Employment:

The ETL-B unit can be employed where solenoid valves, motors etc. are to be switched on upon attainment of a preselected number of pulses.

Switching-off is effected by a return signal via a control element, with the signal being dynamically evaluated in the unit.

Dimensions

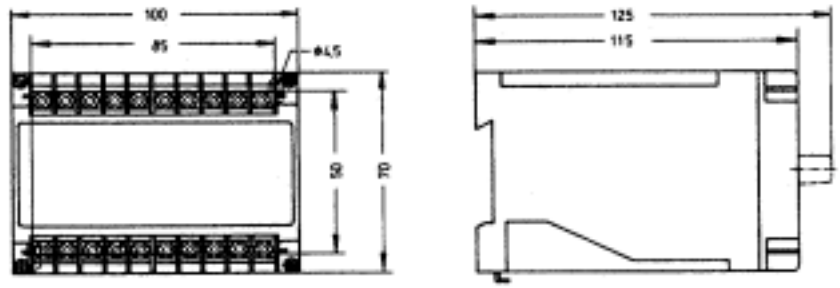

Technical data:

Power consumption max.:	ca.3,2 VA
Connection voltage normaly:	230 V 50÷60 Hz
Special voltages possible	
Contact load of E1/E2:	current 10 mA voltages 24 VUC
Contact data: AZ/Üb:	250 VUC; max.50 W 250 VAC; 2000 VA J max. 7 A
Counting speed:	max.600 pulses/min
Impulse/pause time:	min 20 msec
Ambient temperature:	0÷+60°C
Weight:	0,45 kg

Application

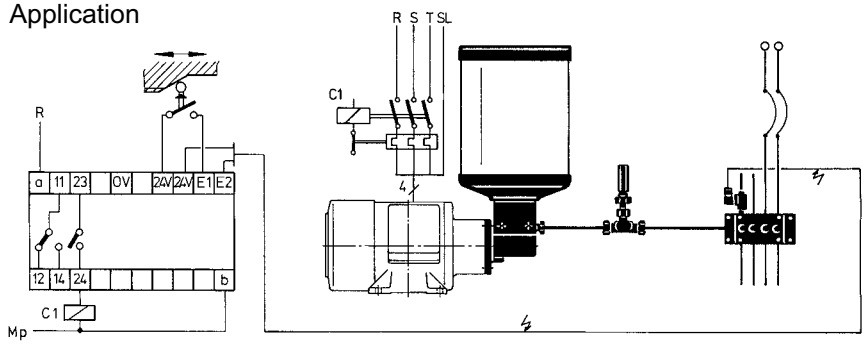

- Änderungen vorbehalten -

EUGEN WOERNER GmbH & Co.KG
Postfach 1661 D-97866 Wertheim
Am Eichamt 8 D-97877 Wertheim
☏ (09342) 803-0 Fax (09342) 803-202
E-Mail: info@woerner.de

Leaflet-No. **0050.01.02 GB**
Supplements No.
Replaces No.

EUGEN WOERNER GmbH & Co.KG
Postfach 1661 D-97866 Wertheim
Am Eichamt 8 D-97877 Wertheim
☏ (09342) 803-0 Fax (09342) 803-202
E-Mail: info@woerner.de

Switch-on condition

Control voltage on

Whenever the control voltage is switched on (terminal a/b),. the contact AZ terminal 23/24 closes. This contact controls the motor contactor, for example (Prelubrication).

Switch-on condition - counting:

The pulses are feed into the unit via an external pickup (terminal 24V/E1). These pulses are added up by counters, until the value set at the decade switches is attained.

When this value is attained, contact AZ closes. At the same time, the counter is reset to zero and begins again to count the pulses being feed in.

Switch-off condition:

Switching of AZ initiates a function in the system by which a control element triggers a switching operation.

When a contact in the control element is closed (connected to terminal 24V/E2), contact AZ opens again.

The input 24V/E2 is dynamic, i.e. only the transfer to contact is open; the closed contact is evaluated.

Setting the number of pulses:

Setting of the required number of pulses is carried out at two decade switches. The folowing settings are possible, depending on the multiplier of the unit

Right decade x 1
Left decade x10
= setting range 1 99

Right decade x 10
Left decade x100
= setting range 10 990

Right decade x 100
Left decade x1000
= setting range 100 9900

The setting ranges must be quoted when ordering.

Connection of the approximation initiator:

Approximation initiators can also be used for the external pickup. They must be designed for 24V DC, three-wire design and a PNP output. The connection is made at terminals 0V/24V/E1.

Monitoring:

The operating time is monitored. A period of monitoring expires when contact AZ is closed. The monitoring period is reset when the contact is opened.
If no switch-off signal is given, a fault signal is transmitted. The fault signal is indicated visually on the unit and switches a potential-free alarm output. The monitoring period to be set must be quoted when ordering. it can total 60 or 300 seconds.

Alarm output:

The alarm output is used for external evaluation of the fault signal The contact terminal 11/14 is closed, 11/12 is open during trouble-free operation. The reverse switching condition exists when fault occurs.

Indication:

The availabe LEDs signal the following functions:

LED - ÜB:	lights up at release, off when faul occurs
LED - AZ:	lights up during period of operation
LED - Imp.:	lights up when pulse contact switches

Order designation: Control- and monitoring unit ETL-B/○/○/○

Counting range	Monitoring time	Voltage/Frequency
1 99 0099 10 999 0990 100 9900 9900	60 sec 060 300 sec 300	state in the order