WOERNER
ZENTRALSCHMIERANLAGEN

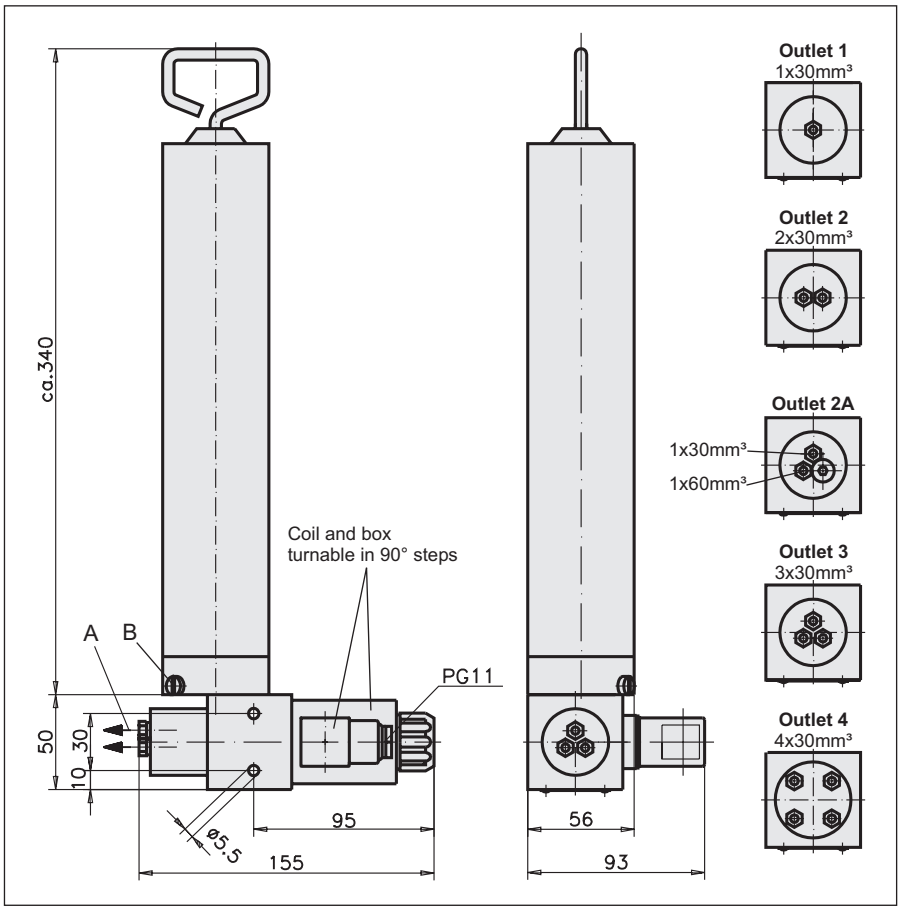

Delivery pump GML-A

electromagnetically actuated

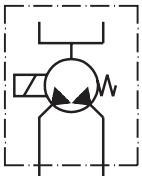

- **Up to four outlets**
- **Small construction**
- **Suitable for grease cartridges**

Technical data:

Delivery capacity
per stroke and outlet: 30 mm³

Minimum actuation time: 0,1 s
The actuation and off-duty times depend on the magnet, number of points, and the medium.

Medium: Grease up to NLGI cat. 2
In case of low temperatures, the grease's penetration shall be observed.

Maximum ambient temperature: +50 °C

Reservoir "B"
for use of 400 g cartridges
Filling volume (without cartridge): 0,5 l

Mounting position: as needed

Material:
Pump body: Aluminium
Reservoir: Steel coated
Gaskets (pump): Viton
Gaskets (reservoir): NBR

Weight:
GML-A/ without reservoir: 1,15 kg
GML-A/ with reservoir "B": 1,85 kg

Electric magnet:

Insulating material category: F

Voltage: 24 VDC or 230 VAC
Special voltage possible, please enquire!

Degree of protection: IP65

Plug connection: DIN 43650

The electric magnet is always operated with direct voltage. When connected with alternating voltage, direct voltage is generated via the rectifier integrated into the line box. Then the direct voltage at the electric magnet is approx. 10% lower than the alternating voltage at the line box.

Electric magnet Variant	"A"	"C"
Rated power: [W]	30	121
Energized duty rating: [%]	100	15
Current at 24VDC: [A]	1,27	-
Current at 230VAC: [A]	0,15	0,59

A = Outlets for pipe-AD4 or G1/8
(see purchase-designation)
B = Vent plug

- Subject to modifications -

EUGEN WOERNER GmbH & Co.KG
Postfach 1661 D-97866 Wertheim
Am Eichamt 8 D-97877 Wertheim
☎ (09342) 803-0 Fax (09342) 803-202
E-Mail: info@woerner.de

Leaflet-No. 0102.11.03 GB
Supplements No.
Replaces No. 0102.02.01 GB

EUGEN WOERNER GmbH & Co.KG
Postfach 1661 D-97866 Wertheim
Am Eichamt 8 D-97877 Wertheim
☏ (09342) 803-0 Fax (09342) 803-202
E-Mail: info@woerner.de

Flow chart:

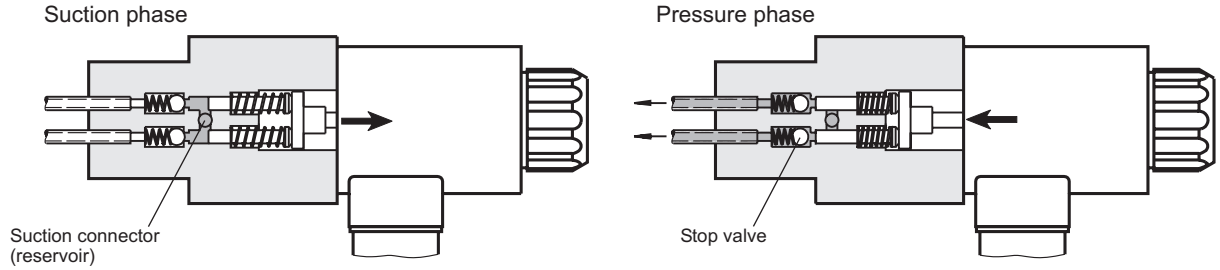

Mode of operation:
The delivery pump consists of a piston pump, an electric magnet, and a reservoir.
Suction phase:
The pistons are set back by means of spring force. As a result, the lubricant is sucked in from the reservoir by virtue of the partial vacuum generated.
Pressure phase:
Upon actuation of the electric magnet, the pistons start to deliver the lubricant to the outlets.

Venting:
In order to ensure a steady delivery, the delivery pump needs to be vented. To this effect, the electric magnet is to be activated as often until the lubricant comes out at all outlets.
In case of cartridge exchange, the vent plug "B" should be opened until the lubricant comes out free of air inclusions.

Delivery pressure:
The maximum possible delivery pressure depends on the electric magnet, the number of outlets and the lubricant.

Outlets (Variant)	Delivery pressure	
	Magnet "A"	Magnet "C"
1	appr. 20bar	appr. 60bar
2	appr. 10bar	appr. 30bar
2A; 3	appr. 7bar	appr. 20bar
4	appr. 5bar	appr. 15bar

Purchase-designation:

Delivery pump GML-A / ○ ○ ○ ○ ○ ○ ○

Outlets	Outlet connector	Reservoir	Delivery and level control	Electric magnet Energized duty rating ED [%]	Supply voltage
1 outlet 1 x 30mm³ (1) 2 outlets 2 x 30mm³ (2) 2 outlets 1 x 30mm³ 1 x 60mm³ (2A) 3 outlets 3 x 30mm³ (3) 4 outlets 4 x 30mm³ (4)	with screwing ALL for pipe AD4 (A) Thread M8x1 for screwing parts acc. to DIN 3871/3862 for pipe-AD4 (G)	Capacity 0,5l for cartridge 400g (B) without reservoir, thread connector G1/4 (G)	without (0)	100 (A)	24VDC (G1)
				100 (A) 15 (C)	230VAC (W1)
				Special magnet [1] (*)	(*)
	Thread G1/8 (R) for outlets "1" and "2" only	for special reservoir with separate purchase-number (*)		without electric magnet [2] (*)	(*)

Purchase-example:

Delivery pump GML-A, outlets 2x30mm³, outlet connector ALL, reservoir 0,5l, without delivery and filling level control, 100% ED, 24VDC.

Purchase-designation:

Delivery pump
GML-A / 2 / A / B / 0 / A / G1

[1] Electric magnets with special voltage available upon request
[2] without electric magnet (spare part)

Filling the cartridge reservoir:

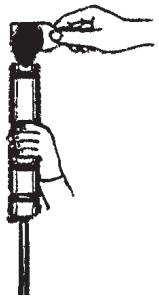

Filling by spattle:
Unscrew reservoir and pull out piston bar a little bit. Fill in bubble-free grease, pull out piston bar, repeat until reservoir is filled.

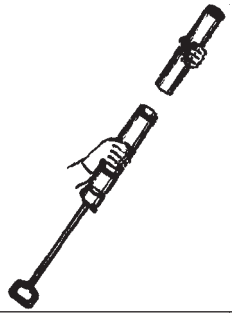

Filling by grease cartridge:
Unscrew reservoir and pull back piston bar up to stop. Then insert both sides opened grease cartridge into reservoir, and screw reservoir on.

Caution!
After having screwed the reservoir on, release projecting piston bar and push it into the reservoir by applying thumb pressure on clamping lever.

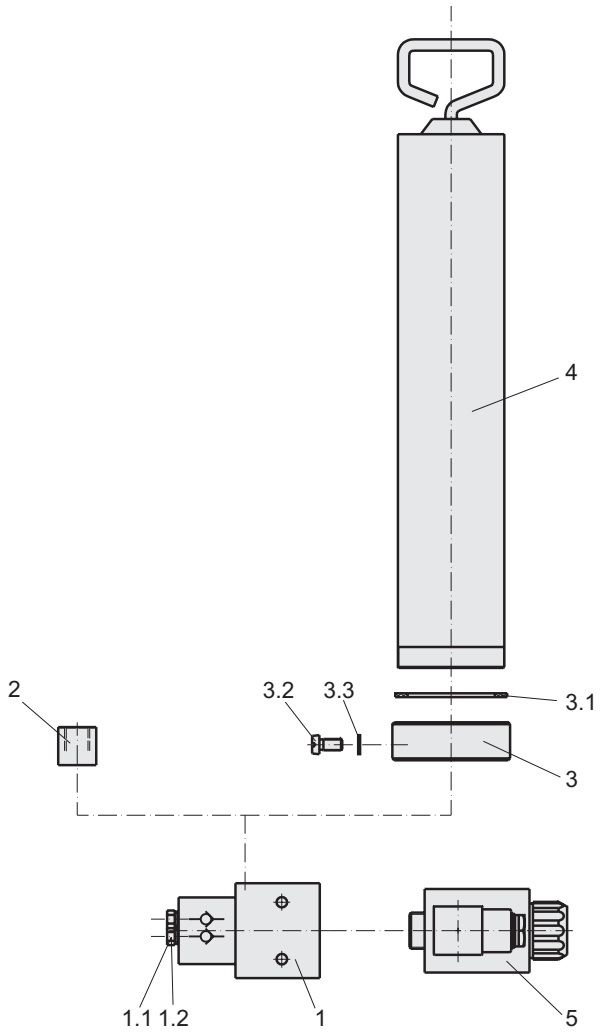

Note on assembly:
Before disassembling the electric magnet, the reservoir needs to be emptied.

Spare parts:

Pos.	Designation	Order-no.
Version for pipe-AD 4:		
1	Pump body, including Pos. 1.1, 1.2	
	1 - point "1"	105.221-65
	2 - point "2"	105.222-65
	3 - point "3"	105.223-65
	4 - point "4"	105.224-65
	Special variant "2A"	105.225-65
1.1	Union screw (1x per outlet)	803.871-01
1.2	Double-cone ring (1x per outlet)	953.300-01
Version with thread connection G1/8:		
1	Pump body	
	1 - point "1R"	105.211-65
	2 - point "2R"	105.212-65
Version without reservoir:		
2	Base plate G1/4	330.370-65
Reservoir:		
3	Reservoir flange (including pos. 3.1 up to 3.3)	105.227-65
3.1	Seal ring	105.229-45
3.2	Screw	807.513-13
3.3	Seal ring	807.603-29
4	Reservoir for grease cartridge	105.226-45
Electric magnet:		
5	Electric magnet A/G1 24 VDC 100 % ED	330.369-65
	Electric magnet A/W1 230 VAC 100 % ED	330.373-65
	Electric magnet C/W1 230 VAC 15 % ED	330.375-65
without picture:		
	Gasket set	105.220-64

- Subject to modifications -

EUGEN WOERNER GmbH & Co.KG
Postfach 1661 D-97866 Wertheim
Am Eichamt 8 D-97877 Wertheim
☎ (09342) 803-0 Fax (09342) 803-202
E-Mail: info@woerner.de