WOERNER
ZENTRALSCHMIERANLAGEN

Delivery pump GMI-A

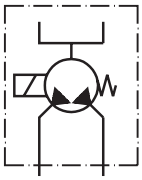

- **Up to four outlets**
- **Compact construction**
- **Different driving power**

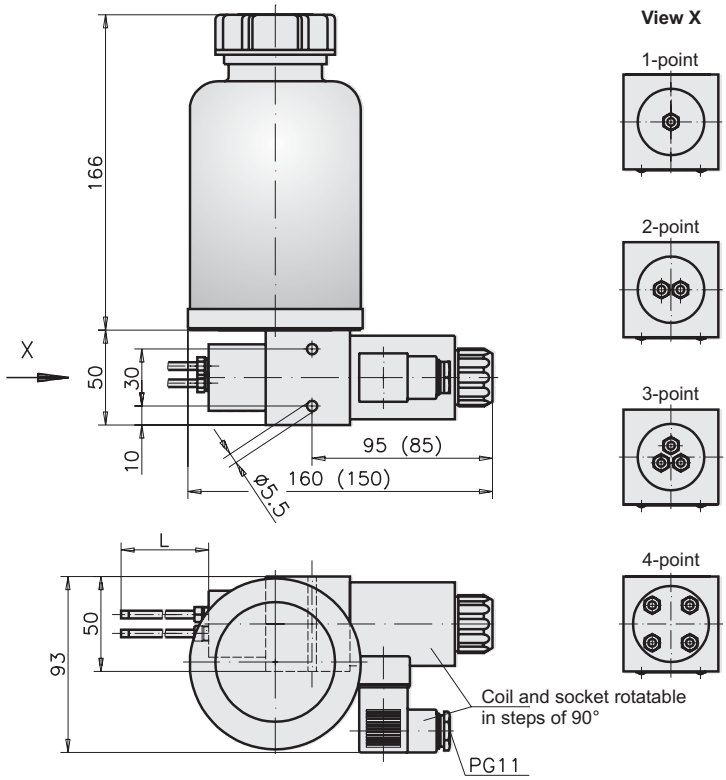

Dimensions within brackets are applicable to a one-digit unit

Technical data:

Delivery volume
per stroke and outlet: 30 mm³

Number of strokes max.: approx. 200 min^{-1}
Actuation time min.: approx. 0,1 s
The actuation and off-times depend on the electric magnet, the number of digits, and the medium.

Lubricant: Oil from 11 to 1900 cP

Ambient temperature: -10 ... +50 °C

Reservoir capacity: 0,7 l

Version without reservoir:
Suction connection: G1/4
Mounting position: Suction connection above

Nozzle tube length: min. 25 mm
max. 1000 mm
The ø4 nozzle tube can be bent manually.

Material:
Pump body: Aluminium
Reservoir: Polyethylene, transparent
Gaskets: Viton

Weight:
GMI-A/../0 1,15 kg
GMI-A/../7 1,40 kg
Level switch 0,10 kg

- Subject to modifications -

EUGEN WOERNER GmbH & Co.KG
Postfach 1661 D-97866 Wertheim
Am Eichamt 8 D-97877 Wertheim
☎ (09342) 803-0 Fax (09342) 803-202
E-Mail: info@woerner.de

Leaflet-No. 0655.07.01 GB
Supplements No.
Replaces No. 0655.02.01 GB

EUGEN WOERNER GmbH & Co.KG
Postfach 1661 D-97866 Wertheim
Am Eichamt 8 D-97877 Wertheim
☏ (09342) 803-0 Fax (09342) 803-202
E-Mail: info@woerner.de

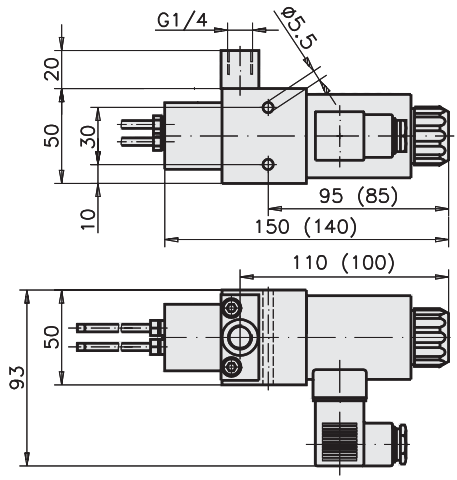

Measures shown in brackets apply to a 1-digit unit

Version without reservoir:

In the version without reservoir, a G1/4 female thread connection piece is mounted.

Level switch in the reservoir lid:

Level switch in the reservoir bottom:

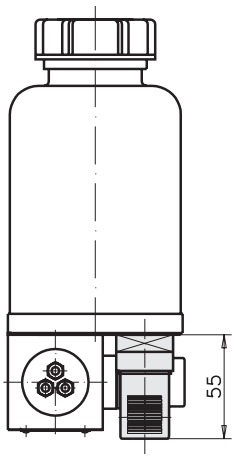

Electrical data:

Level switch with minimal control:

Switching capacity:	10 W 30 VA
Switching current max.:	0,5 A
Switching voltage max.:	230 VUC
Protection type:	IP65
Plug connector:	DIN 43650

Electric magnet:

Insulation class:	F
Voltage:	24 VDC or 230 VAC Special voltage available, upon request!

Electric magnet			
Variante		**"A"**	**"C"**
Nominal power:	[W]	30	121
Energized duty rating:	[%]	100	15
Current at 24VDC:	[A]	1,27	-
Current at 230VAC:	[A]	0,15	0,59

Protection type:	IP65
Plug connector:	DIN 43650

The electric magnet should always be operated by direct voltage. When connecting to an alternating voltage, direct voltage will be generated in the mains socket via the rectifier. Then the direct voltage at the electric magnet will be approximately 10% lower than the alternating voltage at the mains socket.

Electrical connection diagrams

Electric magnet		Level switch	
Alternating voltage	Direct voltage	Closer	Opener
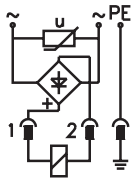	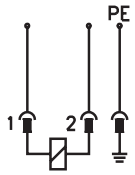	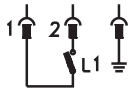	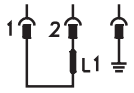

Function scheme:

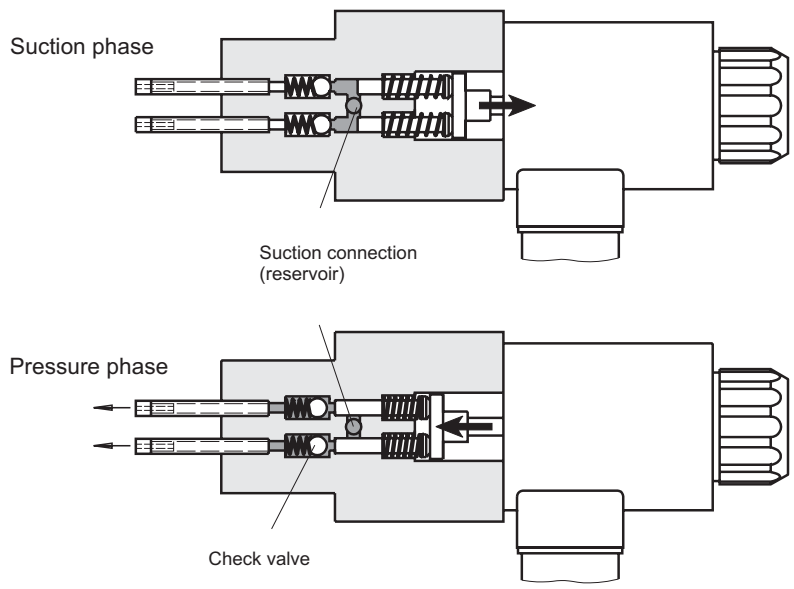

Operation:

The delivery pump consits of a piston pump, an electric magnet and an oil reservoir.

Suction phase:
The pistons are reset by spring force with the lubricant being sucked in from the reservoir by virtue of the vacuum generated.

Compression phase:
Upon electric magnet actuation, the pistons start to deliver to lubricant through the nozzles to the lubricating points.

De-aerating:
In order to ensure a steady delivery, the delivery pump and the nozzle tubes need to be vented. To do this, the electric magnet is repeatedly operated until the lubricant in the nozzle appears free of air.

This operation can be shortened by ascending the nozzle tubes towards the outlet.

Assembly note:
The piston space is connected with the reservoir. Therefore the reservoir needs to be emptied prior to the electric magnet's disassembly.

Order-designation:
Delivery pump GMI-A

Outlets: for pipe-AD 4	Outlets: Connection thread G1/8	Reservoir [l]	Pipe length [mm]	Level switch	Function control	Electric magnet Energized duty rating ED [%]	Connecting voltage
1-point (1)	1-point (1R)	0,7 (7)	(100)	**in the reservoir lid:** Closer (6)	without (0)	100 (A)	24VDC (G1)
2-point (2)	2-point (2R)		(500)	Opener (8)		100 (A) / 15 (C)	230VAC (W1)
3-point (3)		without (0)	(1000)	**in the reservoir bottom:** Closer (6A)		Special magnet [1] (*)	(*)
4-point (4)			without (0)	Opener (8A)		without electric magnet [2] (0)	(0)
				without (0)			

Order-example:

Delivery pump GMI-A, two-point, reservoir 0,7l, pipe length 100 mm, level switch (opener) in the reservoir lid, without function control, 100% ED, 24VDC.

Order-designation:

Delivery pump
GMI-A / 2 / 7 / 100 / 8 / 0 / A / G1

[1] Magnets are available with special voltage upon request
[2] without electric magnet (spare part)

- Subject to modifications -

EUGEN WOERNER GmbH & Co.KG
Postfach 1661 D-97866 Wertheim
Am Eichamt 8 D-97877 Wertheim
☎ (09342) 803-0 Fax (09342) 803-202
E-Mail: info@woerner.de

EUGEN WOERNER GmbH & Co.KG
Postfach 1661 D-97866 Wertheim
Am Eichamt 8 D-97877 Wertheim
☏ (09342) 803-0 Fax (09342) 803-202
E-Mail: info@woerner.de

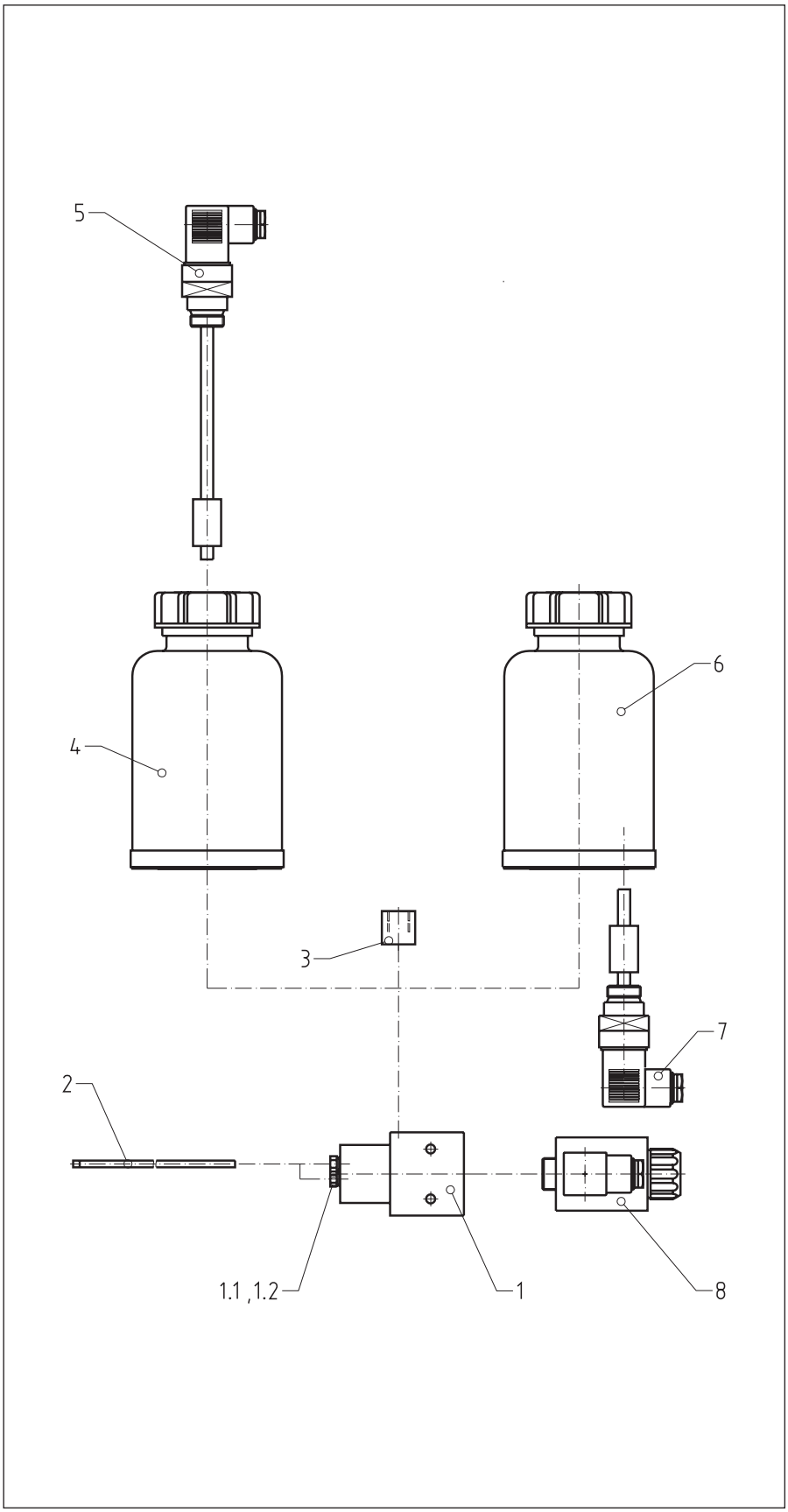

Spare parts:

Pos.	Designation	Order-no.
	Version for pipe-AD 4:	
1	Pump body, including Pos. 1.1, 1.2	
	1 - point "1"	105.201-65
	2 - point "2"	105.202-65
	3 - point "3"	105.203-65
	4 - point "4"	105.204-65
1.1	Union screw (1x per outlet)	803.871-01
1.2	Double-cone ring (1x per outlet)	953.300-01
2	Nozzle tube 100 mm	330.278-65
	Nozzle tube 500 mm	330.312-65
	Nozzle tube 1000 mm	330.286-65
	Version with thread connection G1/8:	
1	Pump body	
	1 - point "1R"	105.211-65
	2 - point "2R"	105.212-65
	Version without reservoir:	
3	Base plate G1/4	330.370-65
	Version without level switch:	
4	Reservoir 0,7 l without lid	330.360-65
	Lid	165.327-65
	Version level switch in the reservoir lid:	
4	Reservoir 0,7 l without lid	330.360-65
5	Level switch with reservoir lid	
	6 (Closer)	165.328-65
	8 (Opener)	165.329-65
	Version level switch in the reservoir bottom:	
6	Reservoir 0,7 l with lid	330.377-65
7	Level switch	
	6A (Closer)	477.053-65
	8A (Opener)	477.213-65
	Electric magnet:	
8	Electric magnet A/G1 24 VDC 100 % ED	330.369-65
	Electric magnet A/W1 230 VAC 100 % ED	330.373-65
	Electric magnet C/W1 230 VAC 15 % ED	330.375-65
	without picture:	
	Gasket set	105.206-64

Assembly note:
Before dismantling the electro magnet, the reservoir must be emptied.