- Subject to modifications -

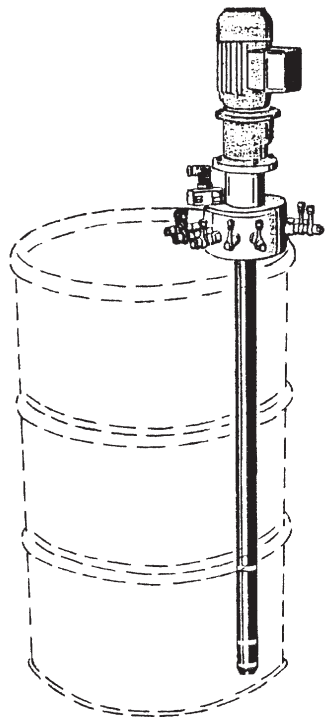

Pump with bung-hole

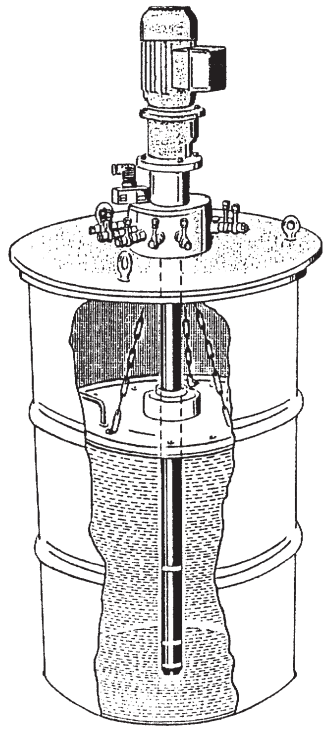

Pump with barrel lid

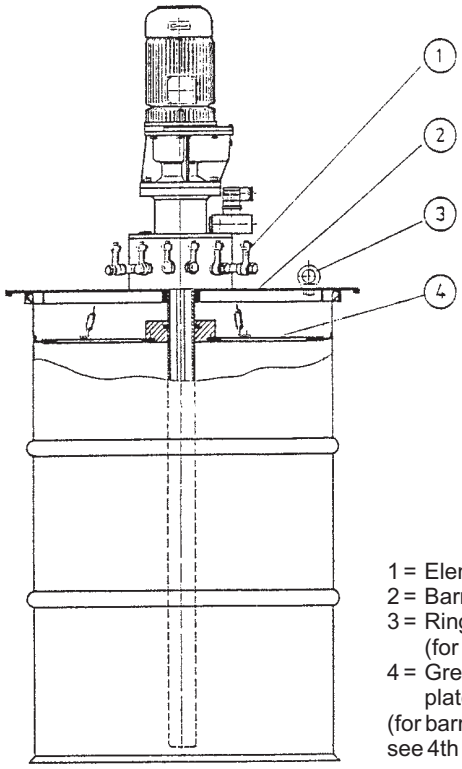

1 = Elements
2 = Barrel lid
3 = Ring screws (for 200l only)
4 = Grease follow-up plate
(for barrel dimensions see 4th page)

Pump unit

GMZ-E

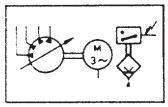

Pump used to supply oil and grease from a barrel directly through a lid-hole or a bunghole.

Technical data:

Delivery volume:
Pump element "6": 0,08 cm³/stroke
Number of strokes: [1] 22 min^{-1}
Number of pump elements: 1 ... 15
Delivery pressure: 350 bar
Lubricant:
Oil: Viscosity > 180 cP (200 cSt, 26 °E)
Grease: Class NLGI 000 ... 2
From class 1 onward follow-up plate required additionally.
Pipe connection: 6, 8 and 10 mm
Temperature range: -10 ... +40 °C
Lower or higher temperatures by request.
Seal material: NBR (Perbunan)

Electrical data:

Motor:
Voltage:
at 50Hz D/Y: 220-240/380-415 V
at 60Hz Y: 440-460 V
Current:
at 50Hz D/Y: 1,21/0,7 A
at 60Hz D/Y: 1,07/0,62 A
Rated speed: [1] 1000 min^{-1}
Power rating: 180 W
Protection type: IP55
Insulation class: F
(Other motors upon request)

Level monitor: (pressure switch)
Switching voltage AC: at max. 230 VAC
at max. 5 A
inductive at max. 3 A
Switching voltage DC: at max. 125 VDC
at max. 0,4 A
inductive at max. 0,05 A
Plug connector: DIN 43650
Protection type: IP65

Connection diagram:

Switch position shown represents: "barrel empty" (pump casing depressurized)

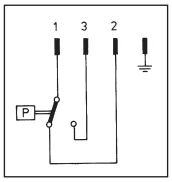

[1] With standard motor and 50 Hz frequency

EUGEN WOERNER GmbH & Co.KG
Postfach 1661 D-97866 Wertheim
Am Eichamt 8 D-97877 Wertheim
☎ (09342) 803-0 Fax (09342) 803-202
E-Mail: info@woerner.de

Leaflet-No. **0668.10.03 GB**
Supplements No.
Replaces No. 0668.01.00 GB

EUGEN WOERNER GmbH & Co.KG
Postfach 1661 D-97866 Wertheim
Am Eichamt 8 D-97877 Wertheim
☏ (09342) 803-0 Fax (09342) 803-202
E-Mail: info@woerner.de

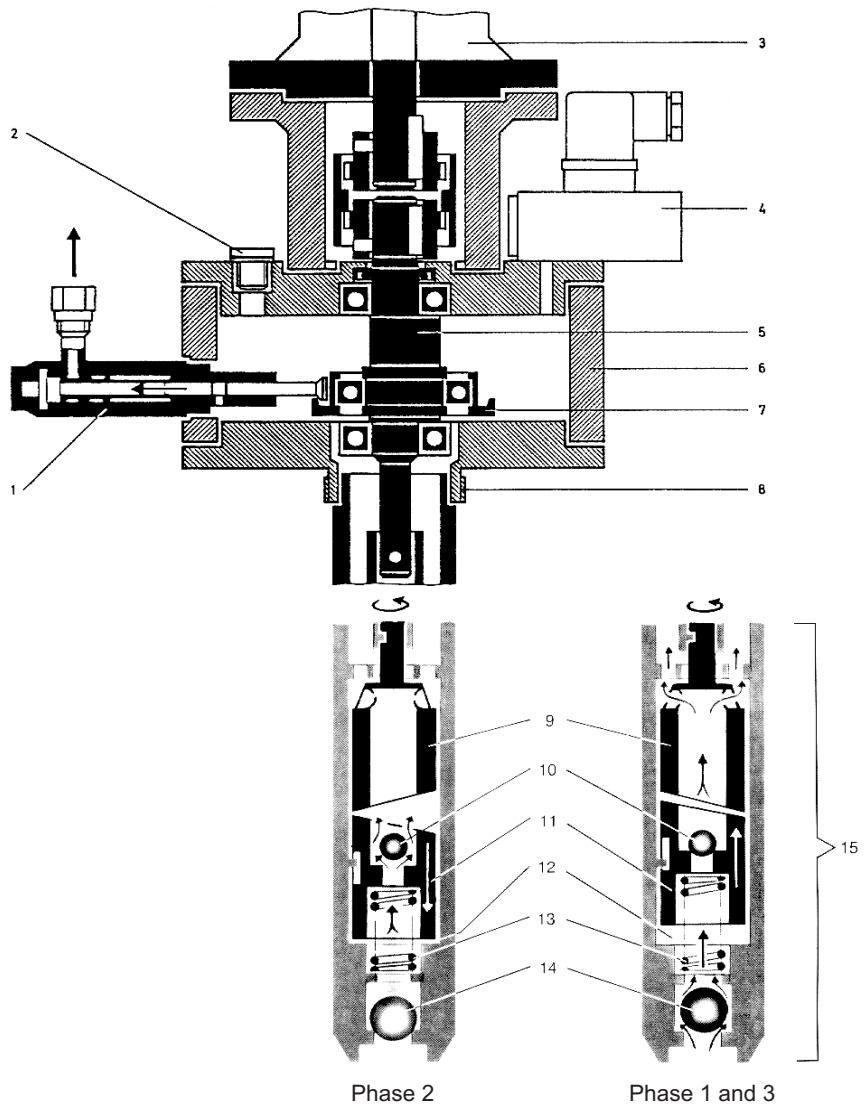

Pump - operating principle:

The barrel pump consists of the following components:

Feed pump (15), pump housing (6), pump elements (1) and drive motor (3). The feed pump (15) is powered by the drive motor (3) via the vertical eccentric shaft (5).

Phase 1
During the suction stroke the delivery piston (11) forced downward by the control piston (9) is pressed upward again by the compression spring (13). The vacuum resulting in the intermediate chamber (12) causes the lubricant to be drawn in via the non-return valve (14).

Phase 2
During the next half revolution of the control piston (9), the delivery piston (11) is forced downward again and the lubricant contained in the intermediate chamber (12) is delivered in upward direction via the non-return valve (10).

Phase 3
Further rotation of the control spool (9) through 180° results in a new suction stroke and the non-return valve (10) closing at the same time enables the spring-loaded delivery piston (11) to force the lubricant above it into the upper pump housing (6).

The level monitor (4) signals "barrel empty" when no more lubricant is delivered by the feed pump (15), however there is still lubricant left in the pump housing.

The vertical eccentric shaft (5) drives a pressure ring (7) to which the pump elements (1) are attached. Due to the eccentricity of the pressure ring (7) each delivery piston performs one constant delivery and suction stroke per pump shaft revolution.
The pump elements (1) draw accurately metered quantities of lubricant (dependent on element adjustment) from the lubricant reservoir in the pump housing (6).

1 - Pump element
2 - Vent screw G1/4
3 - Gear motor
4 - Level control
5 - Eccentric shaft
6 - Pump casing
7 - Pressure ring
8 - Threaded connection G2
9 - Control piston
10 - Check valve
11 - Delivery piston
12 - Intermediate chamber
13 - Pressure spring
14 - Check valve
15 - Delivery pump

- Subject to modifications -

Pump elements - operating principle:

During the suction stroke (A) the delivery piston (3) actuated by the eccentric shaft and the control spool (2) actuated by spring force are shifted to the right (when viewing the drawing). The control spool blocks the pressure passage (6) and stops in a certain position, depending on the delivery volume selected. The delivery piston continues to move and causes a vacuum in the metering space; after the delivery piston has uncovered the suction port (7), lubricant is drawn from the reservoir.

During the pressure stroke (B) the delivery piston is shifted to the left (when viewing the drawing) by the eccentric shaft.

The suction port is blocked and the lubricant contained between delivery piston and control spool shifts the control spool to open the pressure port (6) so that the lubricant is delivered to the discharge port via the non-return valve (1) by the delivery piston.

Flow adjustment:

The pump elements are supplied with maximum delivery setting, i.e. with the stroke set to full length.

The delivery flow is infinitely variable. To adjust the flow remove the plug (4) and adjust the nipple (5) by means of the spanner supplied with the pump. Clockwise rotation results in reduced flow.
The adjusting nipple is provided with a hexagon which is radially subjected to the load of a spring-loaded piston preventing inadvertent change of the delivery flow. At the same time this locking feature provides for setting the delivery flow. The six positions correspond to one nipple rotation which equals 1 mm variation in stroke.

The 3 mm total stroke corresponds to 18 increments. The delivery flow should not fall below 22% of the maximum flow, equaling a reduction by 14 increments from full delivery flow.

Replacing pump elements:

Removal: Turn out the pump element, tilt it downward as shown and then pull it out. Make sure the delivery piston does not get caught in the grease.

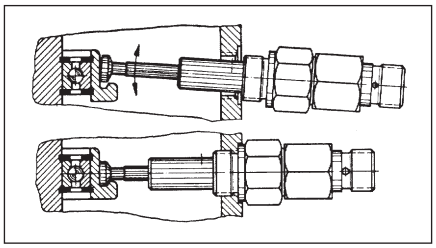

Installation: Tilt the pump element upward and insert it into the housing bore, with the delivery piston pulled out approx. half its length.

To facilitate installation and putting into operation, fill the bore with grease. Move the piston into horizontal position and screw it in only after the delivery piston head makes contact with the pressure ring slot.

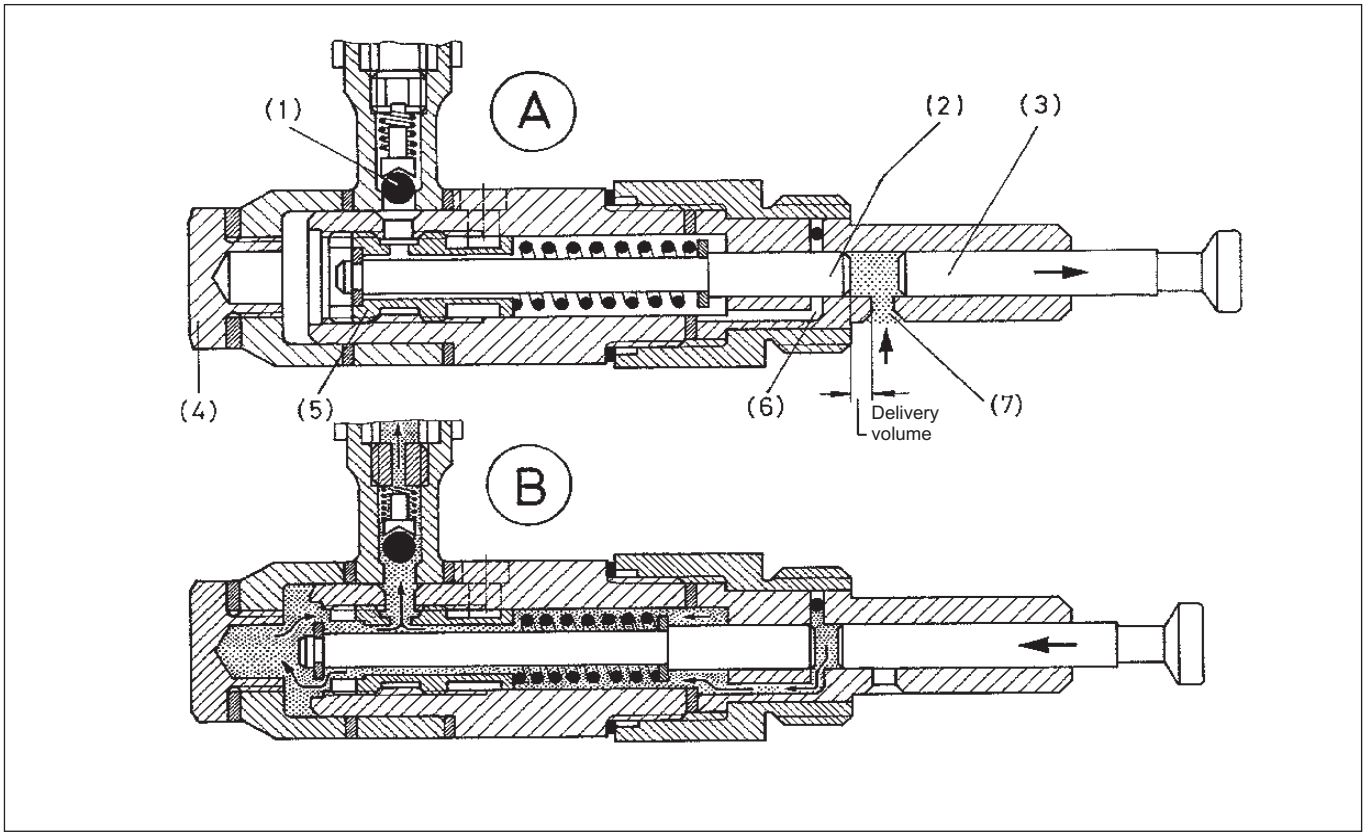

EUGEN WOERNER GmbH & Co.KG
Postfach 1661 D-97866 Wertheim
Am Eichamt 8 D-97877 Wertheim
☏ (09342) 803-0 Fax (09342) 803-202
E-Mail: info@woerner.de

EUGEN WOERNER GmbH & Co.KG
Postfach 1661 D-97866 Wertheim
Am Eichamt 8 D-97877 Wertheim
☏ (09342) 803-0 Fax (09342) 803-202
E-Mail: info@woerner.de

Operating instructions:

Direction of motor rotation:
When connecting the motor make sure the drive shaft rotates counter-clockwise when viewing the fan.

The gear is maintenance-free filled with synthetic oil for its whole working life.

Venting:
Before putting the pump into operation remove the plug (2) to vent the pump housing.

The lubricant supply lines must be clean and allow free passage. Do not connect the lines to the lubrication point before the lubricant flows out bubble-free.

Leak testing:
Inspect all supply line connections for leaks. No lubricant return lines may be connected to the pump unit.

Follow-up plate:
Caution! When using the follow-up plate, do not install it in barrels having deep indentations.

After installation press the rubber seal against the barrel wall.

Caution:
Do not use any barrels with foil inlays.

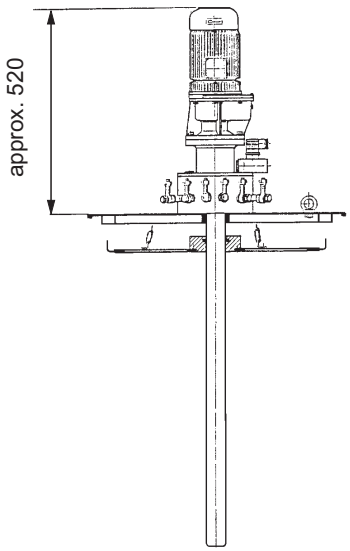

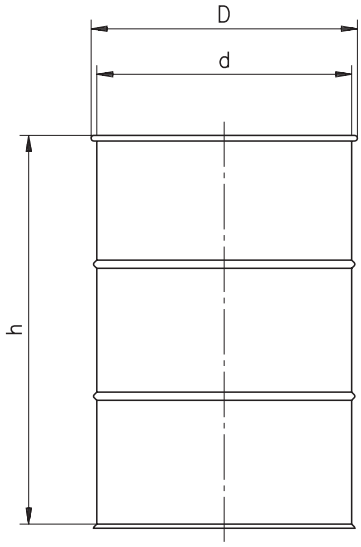

Version	Barrel dimensions			suitable for barrel with nominal filling capacity
	min. inner height h	inner diameter d	max. outer diameter D	
1	850	550 ÷ 570	610	200l acc. to DIN 6644
2	540	340 ÷ 360	385	50l acc. to DIN 6644

Order-designation: Pump unit

Version	Barrel lid	Grease follow-up plate	Element "6" with pipe connection			Motor
for barrel 200l 1	with D	with F	ø6 Number 0 ÷ 15	ø8 Number 0 ÷ 15	ø10 Number 0 ÷ 15	Standard motor (technical data see 1th page) A
for barrel 50l 2	without 0	without 0	max. 15 elements possible			Special motor (please state data) S

Ordering-example:

Pump unit GMZ-E; version for 200l barrel; with barrel cover; without transfer plate; 8 pcs. of element 6 with pipe connector ø6; standard motor

Order-designation:

GMZ-E / 1 / D / 0 / 8 / 0 / 0 / A

- Subject to modifications -

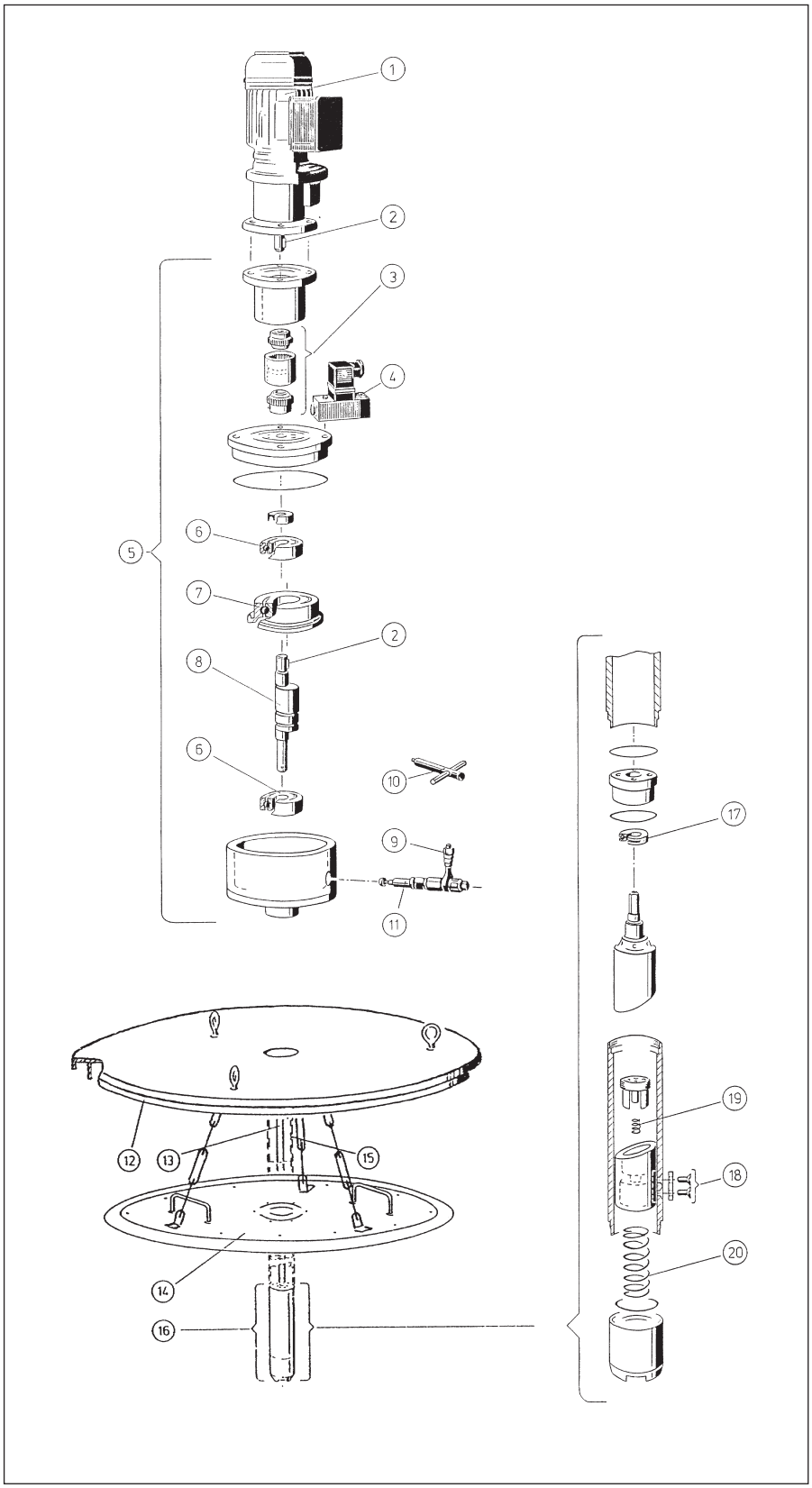

Spare Parts:

Item	Designation	Order-No.
1	Drive motor state voltage and frequency	WN480
2	Inserted feather key A6x6x22	806.885-07
3	Coupling	111.431-64
4	Pressure switch	111.467-45
5	Drive complete incl. items 2, 3, 6, 7 and 8	111.425-65
6	Groove ball bearing 6204-2RS	912.000-11
7	Special groove ball bearing	912.001-01
8	Drive shaft	111.432-64
9	Ring piece 6 Ring piece 8 Ring piece 10	110.070-65 110.080-65 110.090-65
10	Adjusting spanner	110.004-65
11	Pump element 6	110.050-65
12	Barrel lid Version 1 Version 2	 111.436-25 111.461-45
13	Coupling tube Version 1 Version 2	 111.395-65 111.464-65
14	Grease follow-up plate Version 1 Version 2	 111.451-65 111.462-45
15	Outer tube Version 1 Version 2	 111.397-45 111.463-45
16	Feed pump complete incl. items 17, 18, 19 and 20	111.385-65
17	Axial bearing	111.433-64
18	Inserted feather key	111.434-64
19	Compression spring 0,5x4,5x11	911.200-09
20	Compression spring 3,2x20x74	911.201-01
	Set of seals pump	111.425-64
	Sealing grease follow-up plate Version 1	111.354-64

EUGEN WOERNER GmbH & Co.KG
Postfach 1661 D-97866 Wertheim
Am Eichamt 8 D-97877 Wertheim
☎ (09342) 803-0 Fax (09342) 803-202
E-Mail: info@woerner.de