WOERNER
ZENTRALSCHMIERANLAGEN

Control Unit for Switch Cabinet Installation

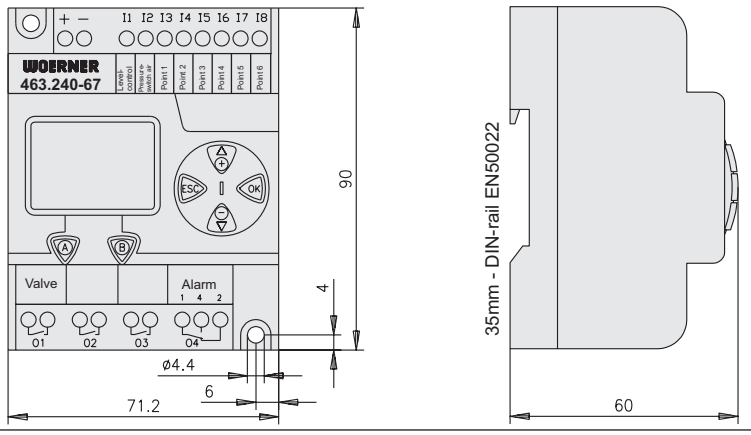

Control Unit with IP54 Housing

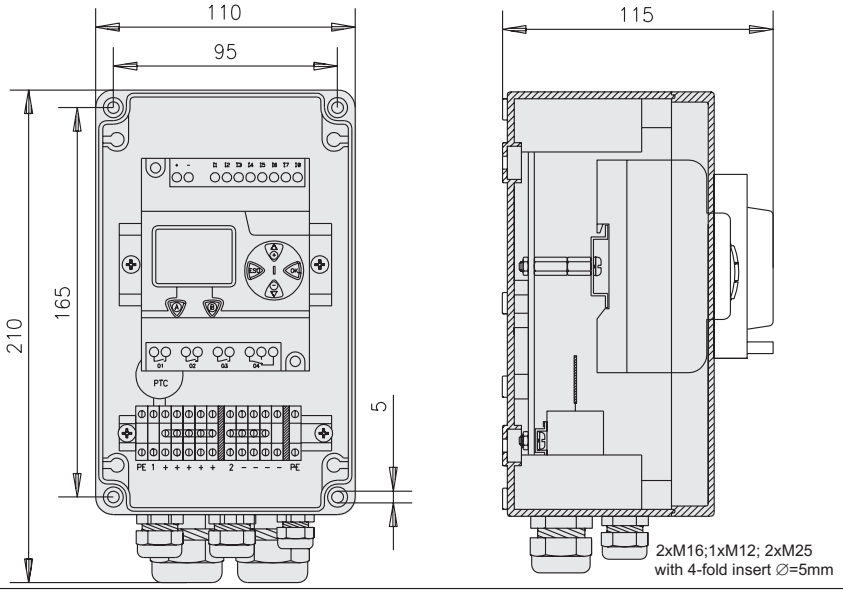

Control and monitoring unit for OL-aggregate GOK-B

Application:

This control and monitoring unit serves to control and monitor an oil/air delivery and proportioning aggregate type GOK-B fitted with delivery monitoring facility.

The pump's directional control valve is switched on and off via time. The following items are monitored: Level, air pressure, and delivery volumes at points 1 to 6.

This print sheet also describes variant Ⓢ of the oil/air delivery aggregate type GOK-B fitted with monitoring facility as per print sheet no. 0140.

In this variant, the control and monitoring unit is integrated into the GOK-B pump aggregate and wired in accordance with the version purchased.

Technical Data:

Power consumption max. (w/o solenoid valve) :	3,5 W
Supply voltage:	24VDC -15% bis +20% (including residual ripple)
Voltage at inputs:	24 VDC
Response time at inputs:	5msec
Input resistance at inputs:	6,8 kΩ
Temperature range:	0...50°C
Degree of protection:	
Unit for witch cabinet installation:	IP 20
Unit with housing:	IP 54
Contact data outputs:	max. 250V AC 30 VDC; 5A
Weight:	approx. 0,8 kg
Data protection:	10 years

Connection diagram

Connection diagram (version with housings have +/- terminals)

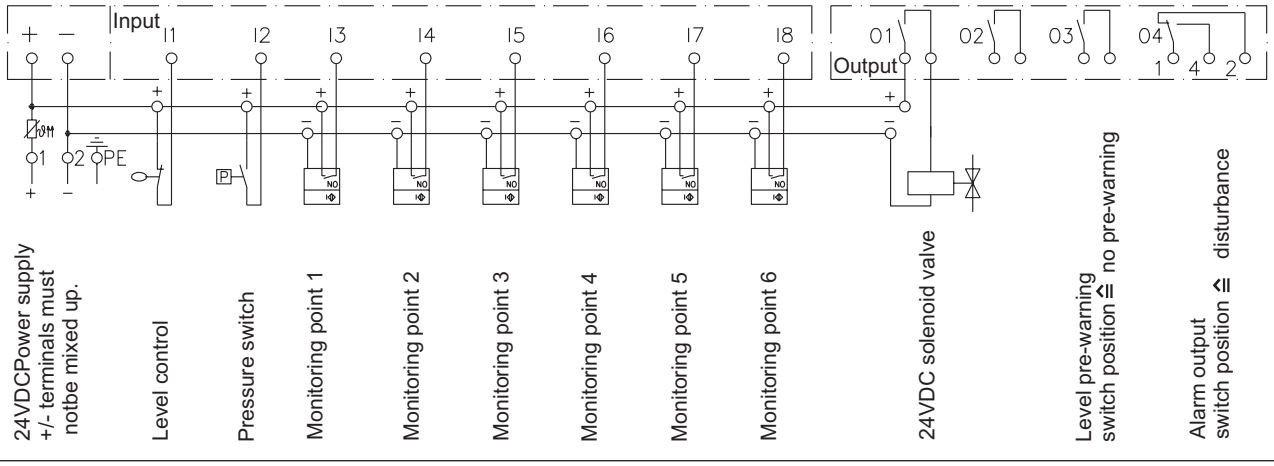

- Subject to modifications -

EUGEN WOERNER GmbH & Co.KG
Postfach 1661 D-97866 Wertheim
Am Eichamt 8 D-97877 Wertheim
☎ (09342) 803-0 Fax (09342) 803-202
E-Mail: info@woerner.de

Leaflet-No. **0491.02.04 GB**

Supplements No.
Replaces No.

EUGEN WOERNER GmbH & Co.KG
Postfach 1661 D-97866 Wertheim
Am Eichamt 8 D-97877 Wertheim
☏ (09342) 803-0 Fax (09342) 803-202
E-Mail: info@woerner.de

Function:

Upon control voltage switch-on, the unit is ready for operation. Simultaneously, solenoid valve triggering is activated.

Solenoid Valve Time Control:

Upon control voltage switch-on, the solenoid valve's triggering time starts. The solenoid valve is triggered for 2 seconds.

The pause target value can be programmed in the range from 1 to 32 767sec. seconds.

Pause actual and target values are displayed on the control unit.

When actual and target values are matching, the solenoid valve will be triggered. In case of voltage switch-off, the actual and target values for off-duty time are stored.

Filling Level Monitoring at Input I1:

At input I1, a level control device is connected to. When oil-filling level suffices, contact is made, whilst in case of minimum filling level, contact will open. At minimum level, output Q3, at first, will switch into pre-warning mode. On the display, the message "Pre-warning Level Fault" appears.

After one hour, if no oil has been refilled meanwhile, alarm output Q4 will switch. On the display, the message "Min. Level Fault" is shown then.

Air Pressure Monitoring at Input I2:

At input I2, a pressure switch is connected to. When pressure is available, contact is made. In case of fault, contact will be opened. As a result, alarm output Q4 will switch. On the display, the message "Pressure Fault" appears.

Delivery Monitoring at Points 1 to 6, Inputs I3 to I8:

Initiators for monitoring points 1 to 6 are connected to inputs I3 to I8. Signal change of any initiator is monitored. After lapse of valve triggering time, a signal change at every initiator must have occurred.

In the absence of signal change, alarm output Q4 will switch. On the display, the point concerned is shown then.

If any initiator is not available, input has to be bridged with preceding input.

Alarm Output O4:

Upon release, the potential-free contact Q4/1 and Q4/4 are made, whereas Q4/1 and Q4/2 is opened. In case of fault and absence of supply voltage, switching condition is reversed.

Fault Deletion:

Faults occurring in delivery monitoring for points 1 to 6 are stored. Storage can be cancelled by supply voltage switch-off or actuating internal switch. Ⓐ

Initiators:

Initiators for monitoring the delivery at points 1 to 6 need to be laid out for 24VDC, three-wire version, and PNP output.

Hand-on Solenoid Valve:

As long as switch ⊕ is actuated, the solenoid valve remains triggered. This function does not affect pause interval.

Messages Displayed During Operation:

Min. level fault
Pre-warning level fault
Pressure fault
Point 1 to 6 fault
Pause ..... sec
Actual value
Desired value

At desired value adjustment:

Adjustment Pause

Operation

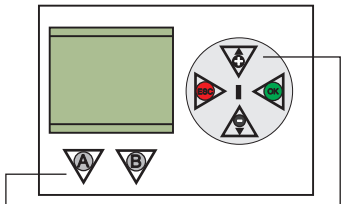

Cancel fault

Hand ON

Desired value adjustment

Desired value for pause interval can be changed as follows:

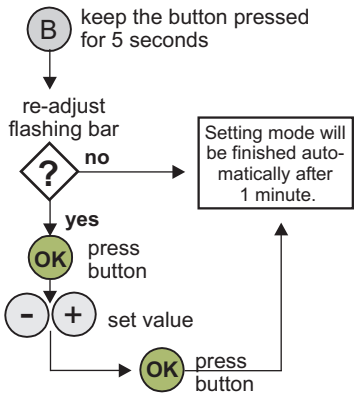

Caution:
Do not set any zero or negative value !

Order designation:

Control unit GOK for switch cabinet installation Degree of protection IP20 Voltage 24VDC	463.240-67
Control unit GOK with housing Degree of protection IP 54 Voltage 24VDC	463.240-66